Cambridge Assessment International Education

Cambridge IGCSE™

CHEMISTRY **0620/21**

Paper 2 Multiple Choice (Extended) **May/June 2020**

45 minutes

You must answer on the multiple choice answer sheet.

You will need: Multiple choice answer sheet
Soft clean eraser
Soft pencil (type B or HB is recommended)

INSTRUCTIONS

- There are **forty** questions on this paper. Answer **all** questions.
- For each question there are four possible answers **A**, **B**, **C** and **D**. Choose the **one** you consider correct and record your choice in soft pencil on the multiple choice answer sheet.
- Follow the instructions on the multiple choice answer sheet.
- Write in soft pencil.
- Write your name, centre number and candidate number on the multiple choice answer sheet in the spaces provided unless this has been done for you.
- Do **not** use correction fluid.
- Do **not** write on any bar codes.
- You may use a calculator.

INFORMATION

- The total mark for this paper is 40.
- Each correct answer will score one mark. A mark will not be deducted for a wrong answer.
- Any rough working should be done on this question paper.
- The Periodic Table is printed in the question paper.

This document has **16** pages. Blank pages are indicated.

IB20 06_0620_21/2RP
© UCLES 2020

[Turn over

www.root19.com +91 - 9969 353 391

1 A mixture of ice and water is left to stand and the ice melts.

Which row describes what happens as the ice is melting?

	temperature of mixture	energy changes
A	increases	average kinetic energy of particles increases
B	increases	energy is used to overcome attractive forces
C	stays the same	average kinetic energy of particles increases
D	stays the same	energy is used to overcome attractive forces

2 Which piece of apparatus should be used to measure exactly 21.4 cm^3 of water?

A 25 cm^3 beaker

B 25 cm^3 pipette

C 50 cm^3 burette

D 50 cm^3 measuring cylinder

3 The chromatogram for an unknown dye is shown.

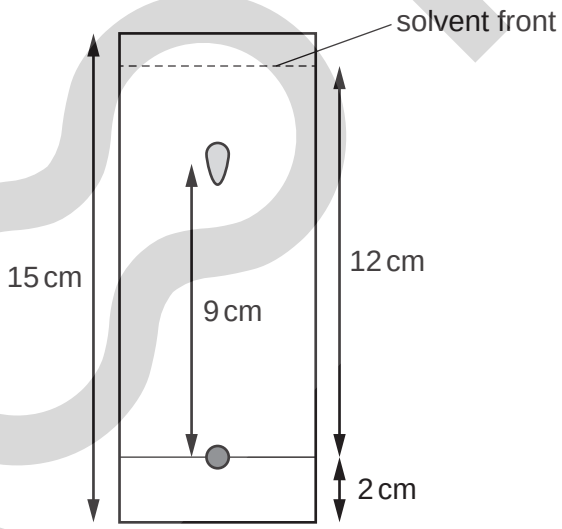

What is the R_f value of the dye?

A 0.60 **B** 0.64 **C** 0.75 **D** 0.82

www.root19.com +91 - 9969 353 391

4 The atomic number and nucleon number of a potassium atom are shown.

	potassium atom
atomic number	19
nucleon number	39

How many protons, neutrons and electrons are in a potassium ion, K^+?

	protons	neutrons	electrons
A	19	20	18
B	19	20	20
C	20	19	18
D	20	19	19

5 The electronic structures of two atoms, P and Q, are shown.

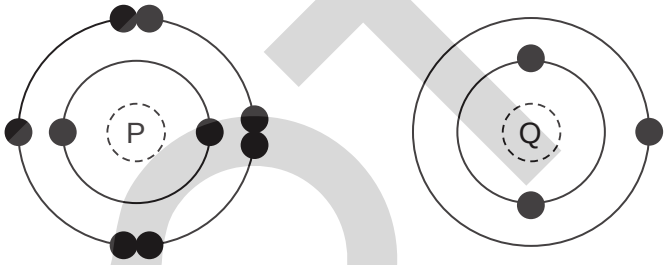

P and Q combine together to form a compound.

What is the type of bonding in the compound and what is the formula of the compound?

	type of bonding	formula
A	ionic	PQ
B	ionic	PQ_2
C	covalent	PQ_2
D	covalent	PQ

root19

www.root19.com +91 - 9969 353 591

6 Which row contains a description of metallic bonding and a property that is explained by reference to metallic bonding?

	description of metallic bonding	property explained by metallic bonding
A	a lattice of negative ions in a sea of electrons	a metal will react with an acid, producing hydrogen
B	a lattice of negative ions in a sea of electrons	a piece of a metal can be moulded into different shapes
C	a lattice of positive ions in a sea of electrons	a metal will react with an acid, producing hydrogen
D	a lattice of positive ions in a sea of electrons	a piece of a metal can be moulded into different shapes

7 Which statement explains why methane has a lower boiling point than water?

A Methane has weaker covalent bonds than water.

B Methane has weaker attractive forces than water.

C Methane molecules are heavier than water molecules.

D Methane molecules have more bonds than water molecules.

8 A solution of iron(III) sulfate reacts with aqueous sodium hydroxide to form a red–brown precipitate.

What is the balanced equation, including state symbols, for the reaction?

A $FeSO_4(aq) + 2NaOH(aq) \rightarrow Fe(OH)_2(s) + Na_2SO_4(aq)$

B $FeSO_4(l) + 2NaOH(l) \rightarrow Fe(OH)_2(s) + Na_2SO_4(l)$

C $Fe_2(SO_4)_3(aq) + 6NaOH(aq) \rightarrow 2Fe(OH)_3(s) + 3Na_2SO_4(aq)$

D $Fe_2(SO_4)_3(l) + 6NaOH(aq) \rightarrow 2Fe(OH)_3(s) + 3Na_2SO_4(l)$

9 The Haber process is a reversible reaction.

$$N_2(g) + 3H_2(g) \rightleftharpoons 2NH_3(g)$$

The reaction has a 30% yield of ammonia.

Which volume of ammonia gas, NH_3, measured at room temperature and pressure, is obtained by reacting 0.75 moles of hydrogen with excess nitrogen?

A $3600\,cm^3$ **B** $5400\,cm^3$ **C** $12\,000\,cm^3$ **D** $18\,000\,cm^3$

www.root19.com +91 - 9969 353 391

10 Dilute aqueous sodium chloride is electrolysed using platinum electrodes.

What is the half-equation for the reaction at the cathode?

A $2H^+ + 2e^- \rightarrow H_2$

B $Na^+ + e^- \rightarrow Na$

C $2Cl^- \rightarrow Cl_2 + 2e^-$

D $4OH^- \rightarrow 2H_2O + O_2 + 4e^-$

11 The electrolysis of aqueous copper(II) sulfate, using inert electrodes, is shown.

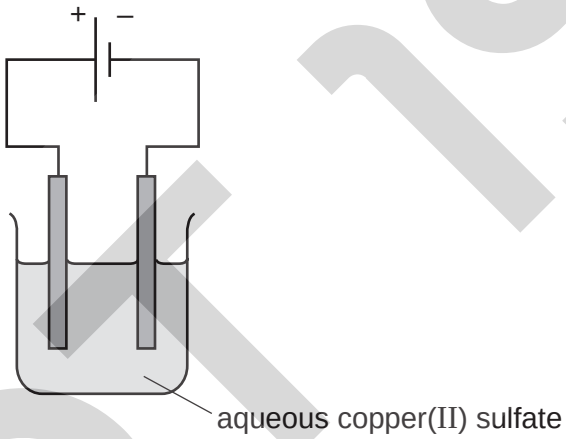

Which statement about a reaction at an electrode is correct?

A Copper ions gain electrons at the negative electrode.

B Copper ions gain electrons at the positive electrode.

C Hydrogen ions gain electrons at the negative electrode.

D Hydrogen ions gain electrons at the positive electrode.

www.root19.com +91 - 9969 353 591

12 The equation for the complete combustion of methane gas is shown.

$$CH_4(g) + 2O_2(g) \rightarrow CO_2(g) + 2H_2O(g)$$

Bond energies are shown.

bond	bond energy in kJ/mol
C–H	412
H–O	463
C=O	743
O=O	498

What is the overall energy change, in kJ/mol, for the above reaction?

A –1192 **B** –694 **C** +694 **D** +1192

13 Which statements about hydrogen fuel cells are correct?

1 Water is formed as the only waste product.

2 Both water and carbon dioxide are formed as waste products.

3 The overall reaction is $2H_2 + O_2 \rightarrow 2H_2O$.

4 The overall reaction is endothermic.

A 1 and 3 **B** 1 and 4 **C** 2 and 3 **D** 2 and 4

14 Which diagram represents a chemical change?

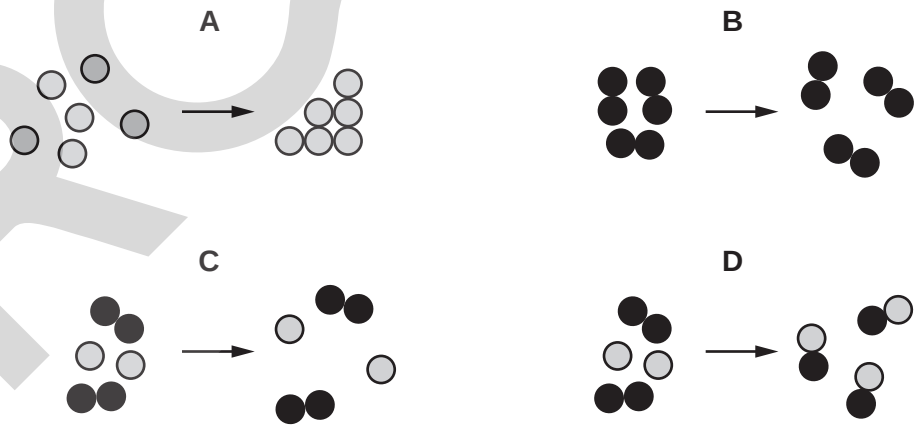

www.root19.com +91 - 9969 353 391

15 The rate of reaction between calcium carbonate chips and hydrochloric acid is studied by collecting the volume of gas released in one minute at different temperatures.

A graph of rate of reaction against temperature is shown.

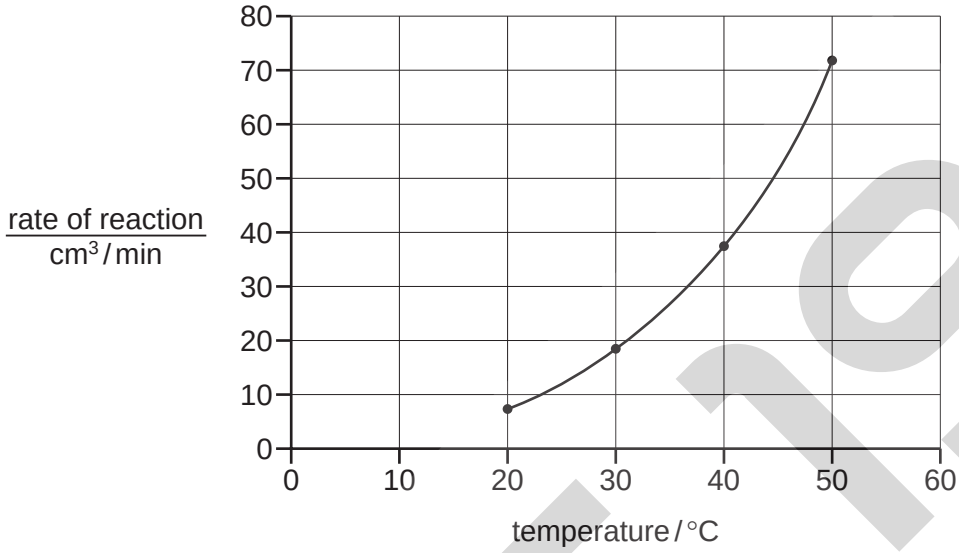

Which statement fully explains why increasing the temperature has this effect on the rate?

A The kinetic energy of the particles increases so the collisions are harder.

B The number of collisions between particles increases.

C The activation energy needed for the particles to react is reduced.

D There are more frequent collisions between particles with enough energy to react.

16 The equation shows the equilibrium between dinitrogen tetroxide, N_2O_4, and nitrogen dioxide, NO_2.

The colours of the reactant and product are also shown.

$$N_2O_4(g) \rightleftharpoons 2NO_2(g)$$

colourless brown

The forward reaction is endothermic.

Which statement is **not** correct?

A At equilibrium the concentrations of the reactant and the product are constant.

B At equilibrium the rate of the forward reaction is equal to the rate of the reverse reaction.

C When the pressure is increased a darker brown colour is seen.

D When the temperature is increased a darker brown colour is seen.

www.root19.com +91 - 9969 353 591

17 The equations for two reactions of iodide ions are shown.

reaction 1 $2I^-(aq) + H_2O_2(aq) \rightarrow I_2(aq) + 2OH^-(aq)$

reaction 2 $I^-(aq) + Ag^+(aq) \rightarrow AgI(s)$

Which statement is correct?

A Both reactions are redox reactions.

B Neither reaction is a redox reaction.

C Only reaction 1 is a redox reaction.

D Only reaction 2 is a redox reaction.

18 The graph shows how the pH of a solution changes as an acid is added to an alkali.

acid + alkali → salt + water

Which letter represents the area of the graph where both acid and salt are present?

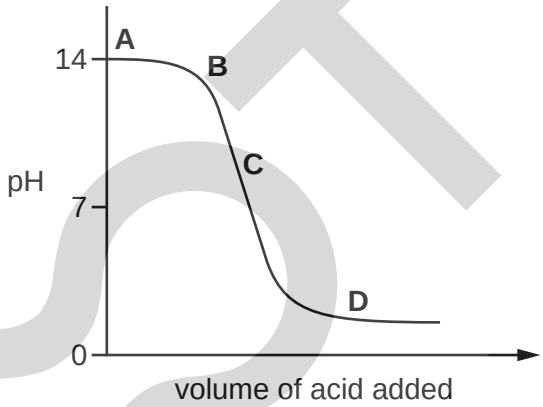

19 Which statement describes a weak acid?

A It is a proton acceptor and is fully ionised in aqueous solution.

B It is a proton acceptor and is partially ionised in aqueous solution.

C It is a proton donor and is fully ionised in aqueous solution.

D It is a proton donor and is partially ionised in aqueous solution.

www.root19.com +91 - 9969 353 391

20 The apparatus shown is used to prepare aqueous copper(II) sulfate.

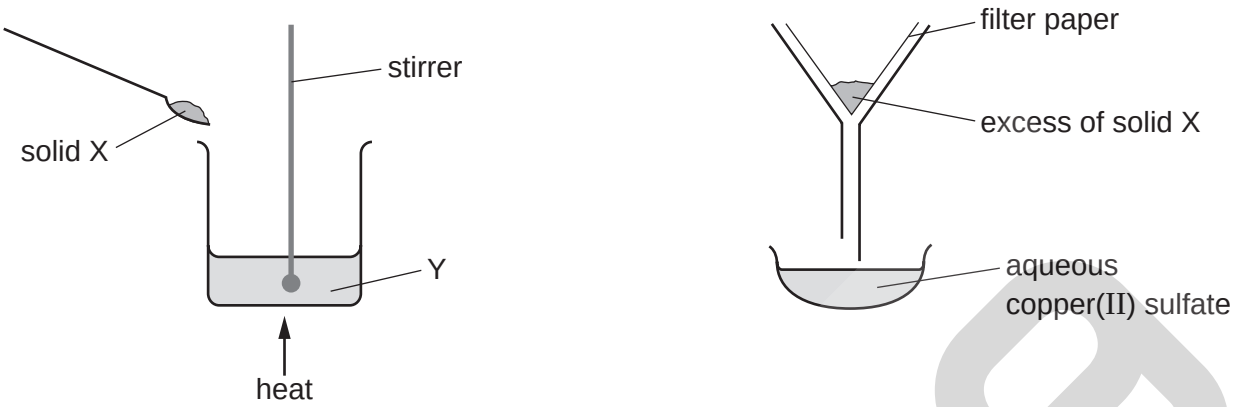

What are X and Y?

	X	Y
A	copper	aqueous iron(II) sulfate
B	copper(II) chloride	dilute sulfuric acid
C	copper(II) oxide	dilute sulfuric acid
D	sulfur	aqueous copper(II) chloride

21 Lead(II) sulfate is an insoluble salt.

Which method is suitable for obtaining solid lead(II) sulfate?

A Mix aqueous lead(II) nitrate and aqueous potassium sulfate, heat to evaporate all of the water, collect the solid and then wash and dry it.

B Mix aqueous lead(II) nitrate and aqueous potassium sulfate, filter, collect the filtrate, crystallise, then wash and dry the crystals.

C Mix aqueous lead(II) nitrate and dilute sulfuric acid, filter, then wash and dry the residue.

D Titrate aqueous lead(II) hydroxide with dilute sulfuric acid, crystallise, then wash and dry the crystals.

22 A Group I metal (lithium, sodium or potassium) is reacted with a Group VII element (chlorine, bromine or iodine).

Which compound is formed when the Group I metal of highest density reacts with the Group VII element of lowest density?

A lithium chloride

B potassium chloride

C potassium iodide

D lithium iodide

www.root19.com +91 - 9969 353 591

23 The properties of the element titanium, Ti, can be predicted from its position in the Periodic Table.

Which row identifies the properties of titanium?

	can be used as a catalyst	conducts electricity when solid	has low density	forms coloured compounds
A	✓	✓	✓	✗
B	✓	✓	✗	✓
C	✓	✗	✓	✓
D	✗	✓	✓	✓

24 A balloon is filled with helium. Helium is a noble gas and makes the balloon rise up in the air.

The density of air is 1.23 g / dm^3.

Which gas is helium?

	density in g / dm^3	reaction with oxygen
A	0.0899	burns rapidly
B	0.179	does not react with oxygen
C	1.78	does not react with oxygen
D	3.75	does not react with oxygen

25 Which property is shown by **all** metals?

A They are extracted from their ores by heating with carbon.

B They conduct electricity.

C They form acidic oxides.

D They react with hydrochloric acid to form hydrogen.

© UCLES 2020
www.root19.com

+91 - 9969 353 391

26 Sodium nitrate is a white crystalline solid that decomposes on heating.

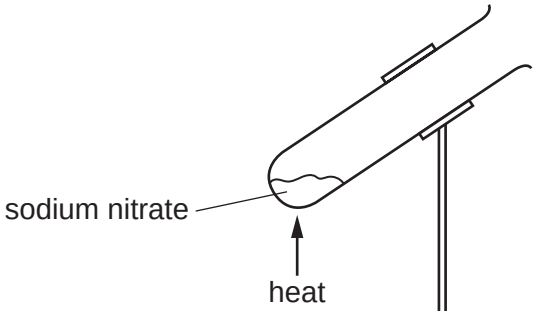

Which row describes the decomposition products formed when sodium nitrate is heated strongly?

	solid products	gaseous products
A	sodium nitrite	NO_2 and O_2
B	sodium nitrite	O_2 only
C	sodium oxide	NO_2 and O_2
D	sodium oxide	O_2 only

27 Molten iron from the blast furnace contains impurities.

The process of turning the impure iron into steel involves blowing oxygen into the molten iron and adding calcium oxide.

What are the reasons for blowing in oxygen and adding calcium oxide?

	blowing in oxygen	adding calcium oxide
A	carbon is removed by reacting with oxygen	reacts with acidic impurities making slag
B	carbon is removed by reacting with oxygen	reacts with slag and so removes it
C	iron reacts with the oxygen	reacts with acidic impurities making slag
D	iron reacts with the oxygen	reacts with slag and so removes it

28 Element Y reacts with copper(II) oxide to form copper.

Element Y will not react with zinc oxide. Copper has no reaction with zinc oxide.

What is the order of reactivity of these three elements, most reactive first?

A Cu → Y → Zn

B Cu → Zn → Y

C Zn → Cu → Y

D Zn → Y → Cu

www.root19.com +91 - 9969 353 591

29 Which statement shows that a liquid is pure water?

A It boils at 100 °C.

B It has a pH value of 7.

C It turns blue cobalt(II) chloride pink.

D It turns white copper(II) sulfate blue.

30 Which process removes carbon dioxide from the atmosphere?

A combustion

B decomposition

C photosynthesis

D respiration

31 Ammonia is manufactured by the Haber process.

$$N_2(g) + 3H_2(g) \rightleftharpoons 2NH_3(g)$$

What are the conditions used in the Haber process?

	temperature / °C	pressure / atm
A	400	100
B	400	300
C	20	300
D	20	100

32 Coating iron helps to prevent rusting.

Which coating will continue to protect the iron even when the coating is damaged?

A copper

B paint

C plastic

D zinc

© UCLES 2020
www.root19.com

+91 - 9969 353 391

33 A student suggests three uses of calcium carbonate (limestone).

1 manufacture of cement

2 manufacture of iron

3 treating alkaline soils

Which suggestions are correct?

A 1 and 2 only **B** 1 and 3 only **C** 2 and 3 only **D** 1, 2 and 3

34 The Contact process is used to manufacture concentrated sulfuric acid and consists of four steps.

Which step involves a catalyst?

A production of sulfur dioxide gas

B production of sulfur trioxide gas

C production of oleum

D production of concentrated sulfuric acid

35 Which row about the production of ethanol by fermentation is correct?

	raw materials	energy requirement	rate of reaction
A	non-renewable	high	slow
B	renewable	low	slow
C	non-renewable	low	fast
D	renewable	high	fast

36 Which statement about homologous series is correct?

A Members of a homologous series have the same structural formula.

B Members of a homologous series all have similar chemical properties.

C Members of a homologous series all have similar physical properties.

D Members of all homologous series are hydrocarbons.

© UCLES 2020
www.root19.com

+91 - 9969 353 591

37 Increasing the number of atoms in one molecule of a hydrocarbon increases the amount of energy released when it burns.

What is the correct order?

	less energy released	→	more energy released
A	ethene	ethane	methane
B	ethene	methane	ethane
C	methane	ethane	ethene
D	methane	ethene	ethane

38 Some properties of an organic compound J are listed.

- It is a liquid at room temperature.
- It is soluble in water.
- A solution of J reacts with calcium carbonate to form carbon dioxide.
- A solution of J has a pH of 3.

In which homologous series does J belong?

A alkane

B alkene

C alcohol

D carboxylic acid

39 Ethane, C_2H_6, reacts with chlorine in a substitution reaction.

What are the products of this reaction?

A chloroethane and hydrogen

B chloroethane and hydrogen chloride

C chloroethene and hydrogen

D chloroethene and hydrogen chloride

© UCLES 2020
www.root19.com

+91 - 9969 353 391

40 Which polymers or types of polymer are synthetic?

1 carbohydrates

2 nylon

3 proteins

4 *Terylene*

A 1 and 3 **B** 1 and 4 **C** 2 and 3 **D** 2 and 4

Permission to reproduce items where third-party owned material protected by copyright is included has been sought and cleared where possible. Every reasonable effort has been made by the publisher (UCLES) to trace copyright holders, but if any items requiring clearance have unwittingly been included, the publisher will be pleased to make amends at the earliest possible opportunity.

To avoid the issue of disclosure of answer-related information to candidates, all copyright acknowledgements are reproduced online in the Cambridge Assessment International Education Copyright Acknowledgements Booklet. This is produced for each series of examinations and is freely available to download at www.cambridgeinternational.org after the live examination series.

Cambridge Assessment International Education is part of the Cambridge Assessment Group. Cambridge Assessment is the brand name of the University of Cambridge Local Examinations Syndicate (UCLES), which itself is a department of the University of Cambridge.

www.root19.com +91 - 9969 353 391

The Periodic Table of Elements

Key

atomic number
atomic symbol
name
relative atomic mass

Group I	Group II											Group III	Group IV	Group V	Group VI	Group VII	Group VIII
							1 H hydrogen 1										2 He helium 4
3 Li lithium 7	4 Be beryllium 9											5 B boron 11	6 C carbon 12	7 N nitrogen 14	8 O oxygen 16	9 F fluorine 19	10 Ne neon 20
11 Na sodium 23	12 Mg magnesium 24											13 Al aluminium 27	14 Si silicon 28	15 P phosphorus 31	16 S sulfur 32	17 Cl chlorine 35.5	18 Ar argon 40
19 K potassium 39	20 Ca calcium 40	21 Sc scandium 45	22 Ti titanium 48	23 V vanadium 51	24 Cr chromium 52	25 Mn manganese 55	26 Fe iron 56	27 Co cobalt 59	28 Ni nickel 59	29 Cu copper 64	30 Zn zinc 65	31 Ga gallium 70	32 Ge germanium 73	33 As arsenic 75	34 Se selenium 79	35 Br bromine 80	36 Kr krypton 84
37 Rb rubidium 85	38 Sr strontium 88	39 Y yttrium 89	40 Zr zirconium 91	41 Nb niobium 93	42 Mo molybdenum 96	43 Tc technetium –	44 Ru ruthenium 101	45 Rh rhodium 103	46 Pd palladium 106	47 Ag silver 108	48 Cd cadmium 112	49 In indium 115	50 Sn tin 119	51 Sb antimony 122	52 Te tellurium 128	53 I iodine 127	54 Xe xenon 131
55 Cs caesium 133	56 Ba barium 137	57–71 lanthanoids	72 Hf hafnium 178	73 Ta tantalum 181	74 W tungsten 184	75 Re rhenium 186	76 Os osmium 190	77 Ir iridium 192	78 Pt platinum 195	79 Au gold 197	80 Hg mercury 201	81 Tl thallium 204	82 Pb lead 207	83 Bi bismuth 209	84 Po polonium –	85 At astatine –	86 Rn radon –
87 Fr francium –	88 Ra radium –	89–103 actinoids	104 Rf rutherfordium –	105 Db dubnium –	106 Sg seaborgium –	107 Bh bohrium –	108 Hs hassium –	109 Mt meitnerium –	110 Ds darmstadtium –	111 Rg roentgenium –	112 Cn copernicium –		114 Fl flerovium –		116 Lv livermorium –		

lanthanoids	57 La lanthanum 139	58 Ce cerium 140	59 Pr praseodymium 141	60 Nd neodymium 144	61 Pm promethium –	62 Sm samarium 150	63 Eu europium 152	64 Gd gadolinium 157	65 Tb terbium 159	66 Dy dysprosium 163	67 Ho holmium 165	68 Er erbium 167	69 Tm thulium 169	70 Yb ytterbium 173	71 Lu lutetium 175
actinoids	89 Ac actinium –	90 Th thorium 232	91 Pa protactinium 231	92 U uranium 238	93 Np neptunium –	94 Pu plutonium –	95 Am americium –	96 Cm curium –	97 Bk berkelium –	98 Cf californium –	99 Es einsteinium –	100 Fm fermium –	101 Md mendelevium –	102 No nobelium –	103 Lr lawrencium –

The volume of one mole of any gas is 24 dm^3 at room temperature and pressure (r.t.p.).

© UCLES 2020

www.root19.com
+91 - 9969 353 391